YAMAHA YAMAHA MOTOR CO.,LTD.

SCARA Robots YK4000 SERIES

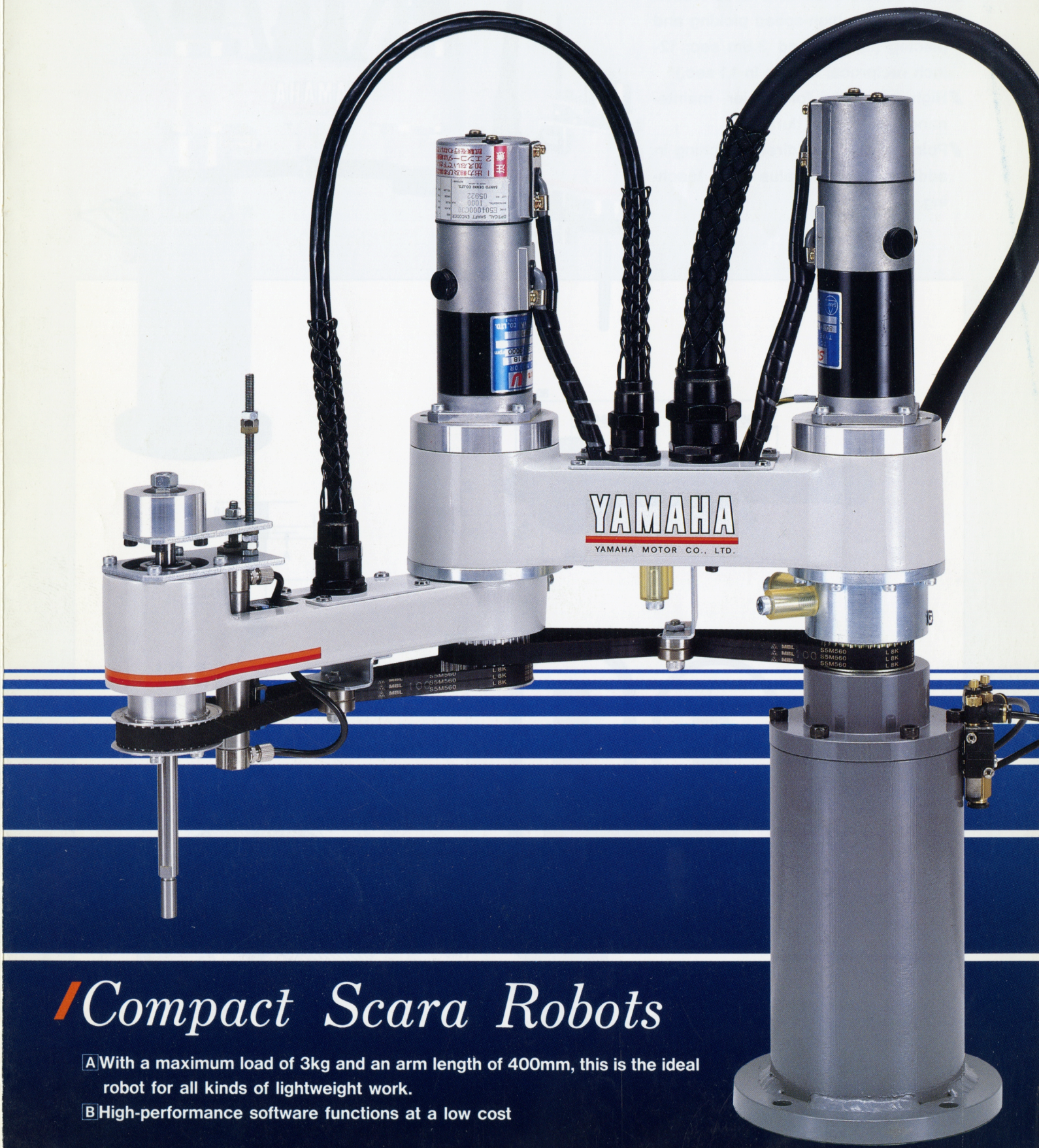

Compact Scara Robots

A With a maximum load of 3kg and an arm length of 400mm, this is the ideal robot for all kinds of lightweight work.

B High-performance software functions at a low cost

YK4000

Standard Model

- Fast acceleration and deceleration for optimum high-speed picking and placing (max. speed 3.8m/sec; 12-inch reciprocal motion in 1.1 sec.)
- High reliability for easier maintenance and better durability
- Point input allows direct teaching in addition to pulse value input teaching.

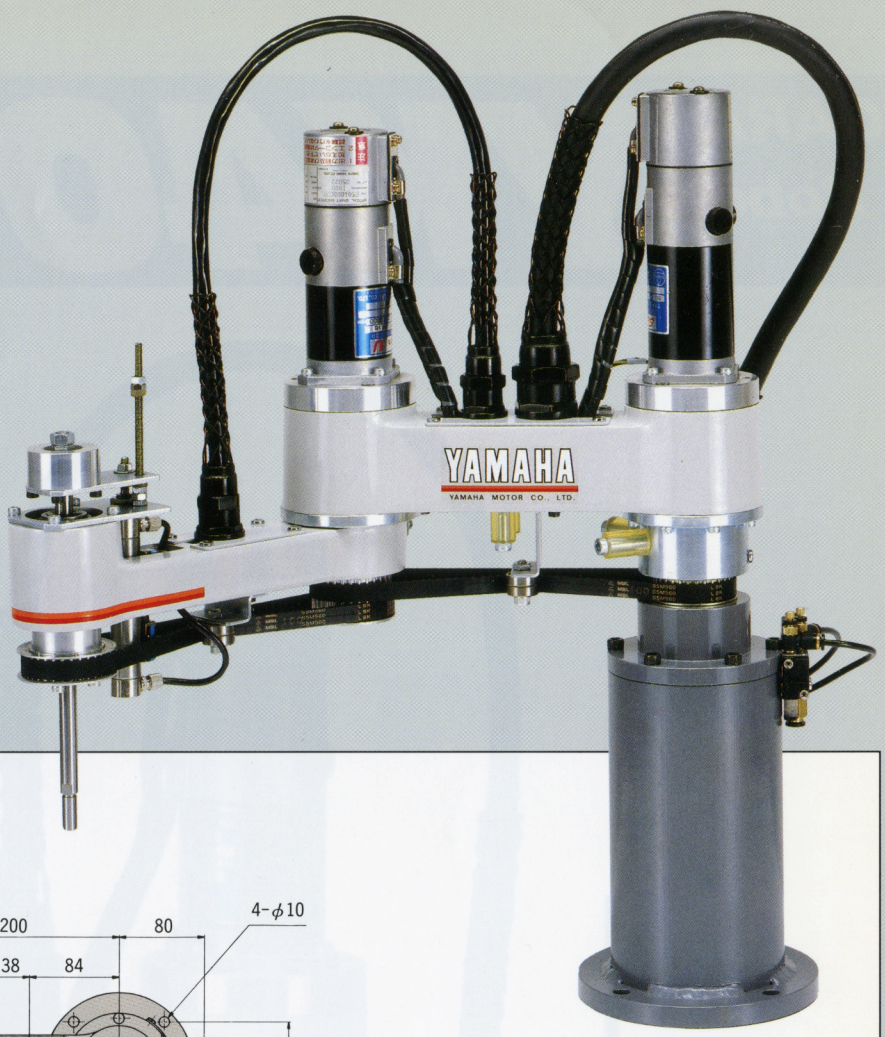

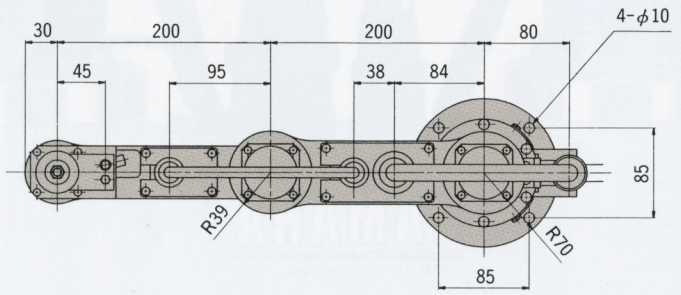

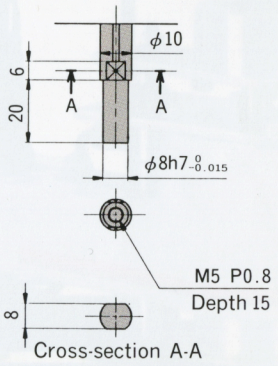

Detail of tip section

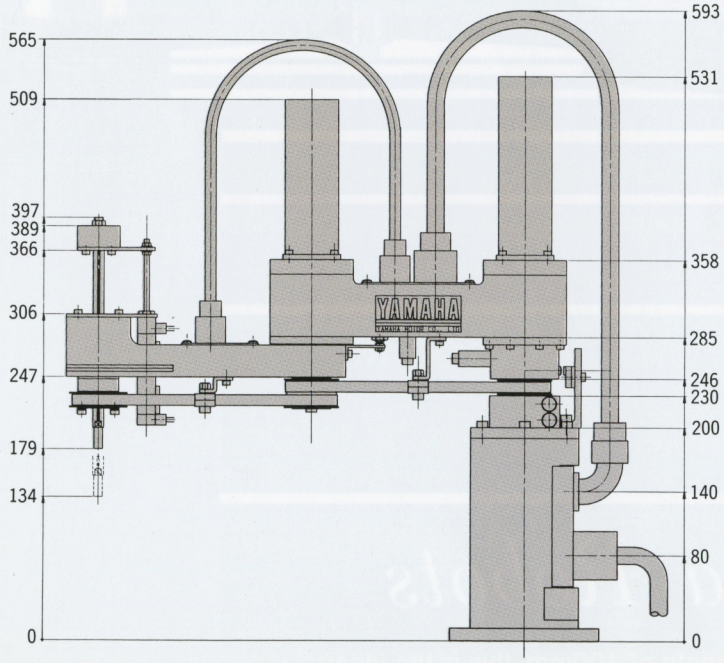

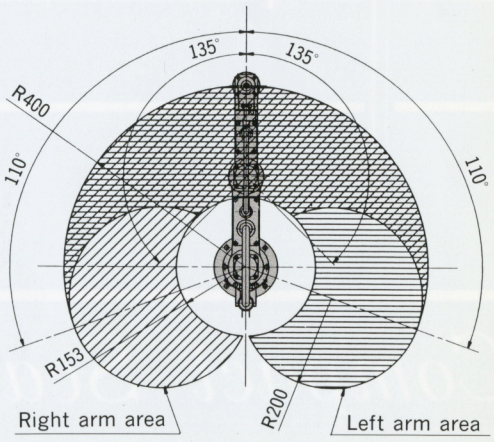

Working Area

YK4000LZ

Z Axis Long Stroke Model

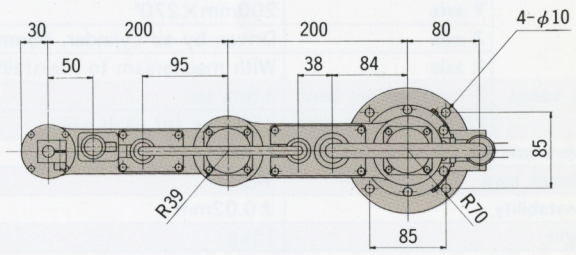

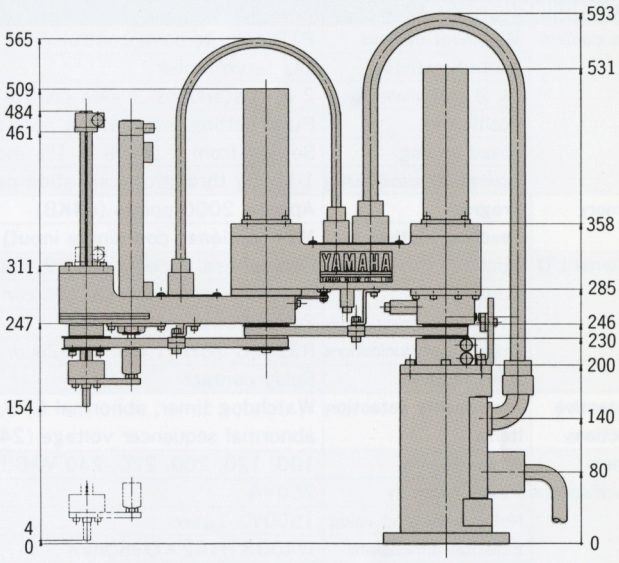

(YK4000LZ 150mm stroke)

- The Z axis (air) has a long stroke of 150mm, enabling an even wider range of applications.

* Other options include R axis and Z axis DC servo specifications(4-axis DC servo).

Robot Control System

Controller (standard equipment)

RCH20

- A compact controller with an impressive number of software functions

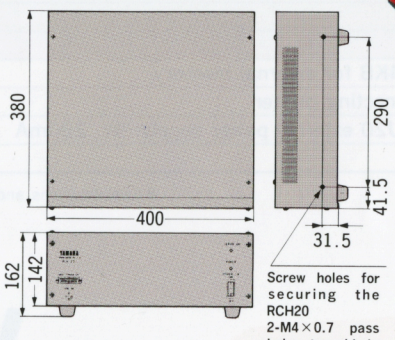

Screw holes for securing the RCH20
2-M4×0.7 pass holes, two-sided

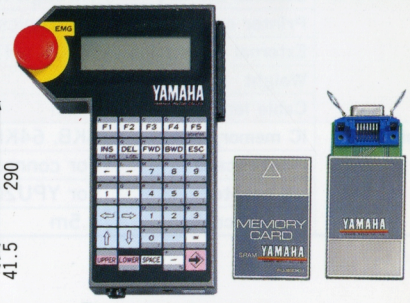

Programming Unit

YPU20

(optional)

- Compact and handy, with a large crystal display of 20 characters × 4 lines
- External program memory available with an IC memory card. Program printout enabled by using a printer card.

Controller

RCH40 (optional)

- Linear interpolation, circular interpolation and Cartesian coordinate setting are all possible, along with greatly expanded memory capacity and a larger number of I/O points.

Basic Specifications

YK4000 SERIES

■Robot YK4000(LZ)		
Robot type		Scara
Motor		D.C. servo motor, X axis: 80W, Y axis: 45W
Speed reducer		Harmonic drive, reduction ratio 1/50 (X/Y axes)
Working areas	X axis	200mm×220°
	Y axis	200mm×270°
	Z axis	Driven by air cylinder, 45mm stroke (YK4000LZ 100mm, 150mm)
	R axis	With mechanism to maintain tip direction
Max. speed	X/Y axes resultant speed	3.8m/sec
	X/Y axes rotational speed	360°/sec for each axis
Standard cycle time (12-inch reciprocal)		1.1sec
Maximum load		3kg
Repeatability		±0.02mm
Weight		15kg
Cable length		3.5m
■Controller (RCH20)		
Axis control	Movement method	PTP(point-to-point)control
	Control method	DC servo moter
	No. of controllable axes	2 axes standard, 3 axes control possible with single-axis controller(optional)
	Positioning	Pulse setting; mm setting possible with option
	Speed setting	Setting from 1-100% in 1% increments; also possible through programming
	Acceleration/deceleration setiing	1-100% through acceleration parameter, in 1% increments; also possible through programming
Memory	Program	Approx. 2000 points (64KB)
	Teaching method	MDI (optional: coordinate input), teaching playback, direct teaching
External I/O	Input	General use: 8 contacts (32 contacts optional), special use: 5 contacts
	Output	General use: 8 contacts (24 contacts optional), special use: 5 contacts
	External drive power supply	24V, 500mA; optional 2A
	External communications	RS232C 2CH (1 CH: YPU20 or host communications, 1 CH: reserved for additional axis)
	Brake output	Relay contact
Protective functions	Abnormality detection items	Watchdog timer, abnormal CPU/encoder /driver, drop in battery voltage/power supply voltage, abnormal sequencer voltage (24V), temperature rise
General Specifications	Power supply	100, 120, 200, 220, 240 VAC±10%, single-phase 50/60Hz
	Power capacity	250VA
	Noise withstand value	1500V、1μsec
	External dimensions	W400×H162×D380mm
	Weight	12kg
Optional	Additional axis	Internal wiring, cable (1m) for connecting to single-axis controller, single-axis controller
	Optional software	Coordinate input possible (mm setting)
	Programming Unit	YPU20
■Programming Unit (YPU20)		
Main unit	Display	Crystal display 20 characters × 4 lines
	Emergency stop	With lock, mushroom type, B contact point
	External communications	RS232C, 1 CH for communicatons with controller or personal computer
	External memory	Through IC memory card
	Printer output	Centronics standard, printer card usable
	External dimensions	W100×H190×D30mm
	Weight	750g
	Cable length	3.5m
Options	IC memory card	8KB, 64KB for external memory
	Printer card	For connecting printer
	AC adapter	For YPU20 external power supply: 9V, 200mA
	Tip I/O cable	3.5m

● Specifications and Appearance are subject to change without prior notice (July 1990)

For information, contact:

Yamaha Motor Corporation, U.S.A.
6461 Global Drive
Cypress, California 90630
714-761-7518

YAMAHA
YAMAHA MOTOR CO., LTD.
IM DIVISION
1280 Nakajo Hamakita-shi Shizuoka-ken 434 JAPAN
Tel: 81-5358-7-1119 Telefax: 81-5358-6-6848